FIGURE 2 EXPLODED VIEW

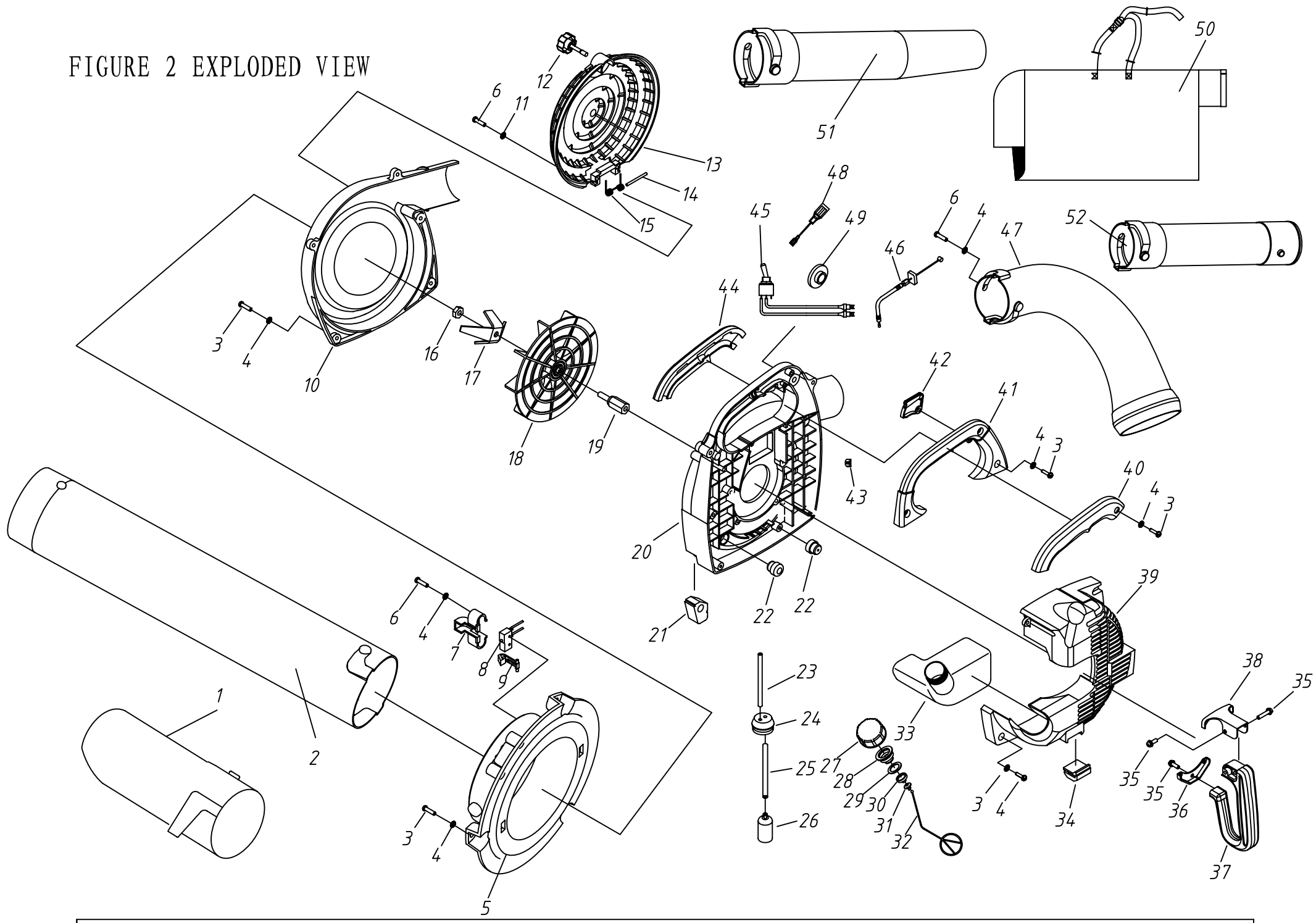

List of Parts of Attached Figure 2

Ser. NO.	Part NO.	Part Name	Qty.	Ser. NO.	Part NO.	Part Name	Qty.	Ser. NO.	Part NO.	Part Name	Qty.
1	EBV260-8	PIPE(2)	1	18	EBV260.2.1	IMPELLER	1	35	GB9074.3	SCREW	3
2	EBV260A-1	PIPE (1)	1	19	EBV260-1	LINK SHAFT	1	36	EBV260.1-2	DRAG BOARD	1
3	GB/T818	SCREW	15	20	EB-260.1.1	VOLUTE CASE	1	37	EBV260.1.1	HANDGRIP	1
4	GB848	WASHER	22	21	EB-260-10	SUPPORT	2	38	EBV260.1-1	DRAG BOARD	1
5	EBV260A.1.1.1	LINK BOARD	1	22	EB-260-14	SUPPORT	2	39	EB-260-1	PROTECTION	1
6	GB/T818	SCREW	4	23	EB-260.5-2	TUBE	1	40	EB-260-3	HANDLE COVER	1
7	EBV260.2.3-2	SWITCH CARAPACE	1	24	1E36FF.8.1-1	PLUG	1	41	EB-260-2	HANDLE	1
8	EBV260.2.3.2	SWITCH	1	25	EB-260.5-3	FUEL TUBE	1	42	EB-260-9	SWITCH	1
9	EBV260.2.3-1	SWITCH ANTENNA	1	26	1E34F.9.2-3	FILTER	1	43	1E34F.5-1	RUBBER PLUG	2
10	EBV260.2.2	VOLUTE CASE	1	27	1E32FL.6.2-1	FUEL TANK LID	1	44	EB-260-4	HANDLE COVER	1
11	GB96	WASHER	1	28	1E32FL.6.2-2	LID	1	45	EBV260.4A	STOP SWITCH	1
12	EBV260.2.4	SCREW	1	29	CG420.1.3.1-2	SEALING WASHER	1	46	EB-260.4	FUEL THROTTLE	1
13	EBV260.2-1	NET COVER	1	30	1E32FL.6.2-3	END COVER	1	47	EBV260-6	COLLECT PLUG	1
14	EBV260.2-2	SPING SCREW	1	31	EB-415.4.1.1-1	AIRVALVE	1	48	EBV260.3	STOP WIRE	2
15	EBV260.2-3	SPING	1	32	1E32FL.6.2-4	CHAIN	1	49	EB-260-KG-1	SWITCH SEAT	1
16	GB/T889.1	NUT	1	33	EB-260.5-1	FUEL TANK	1	50	EBV260.5	SACK	1
17	EBV260-2	COMMINUTE BOARD	1	34	EB-260-12	SUPPORT	1	51	EB-260-7	PIPE	1
52	EB-260-8	PIPE	1								